SLEEVE BEARING 〔SELF-LUBRICATING〕

MJF-A,MJF-C

Minebea
eMINEBEA.COM

SLEEVE | SELF-LUBRICATING | FLANGED

Materials

	MJF-A	MJF-C
SLEEVE	Aluminium Alloy Anodised or Alodined	410 Stainless Steel
LINER	TFE	TFE

Description of Types

MJF XX X XX

- Length Code
- Material Code (A, C)
- Bore Code
- Basic Part No.

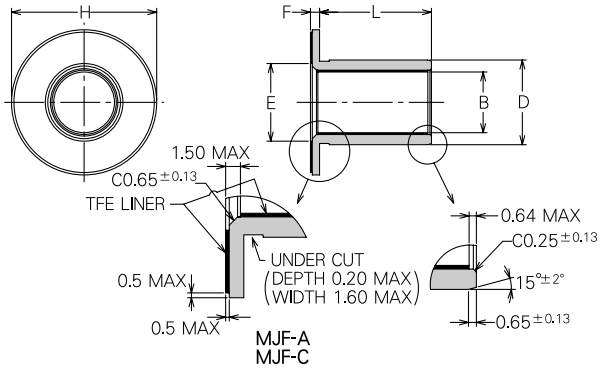

Dimensions in mm

MINEBEA Part No.	φB 0 −0.025	φD (2)	F 0 −0.13	φH 0 −0.5	φE 0 −0.5	WEIGHT g ALUMINIUM	WEIGHT g STAINLESS STEEL
MJF06	6.035	10	1.5	19	8.5	1.08 + 0.14 × L	3.01 + 0.40 × L
MJF08	8.035	11		20	10.5	1.11 + 0.13 × L	3.11 + 0.35 × L
MJF09	9.035	13		22	11.5	1.33 + 0.20 × L	3.73 + 0.54 × L
MJF10	10.035	14		24	12.5	1.57 + 0.21 × L	4.40 + 0.59 × L
MJF12	12.035	16		25	14.5	1.59 + 0.25 × L	4.45 + 0.69 × L
MJF14	14.035	18		28	16.5	1.94 + 0.28 × L	5.43 + 0.79 × L
MJF16	16.035	20		32	18.5	2.53 + 0.32 × L	7.10 + 0.89 × L
MJF18	18.035	22		35	20.5	2.97 + 0.35 × L	8.33 + 0.98 × L
MJF20	20.035	24		38	22.5	3.44 + 0.39 × L	9.65 + 1.08 × L
MJF22	22.035	27		41	24.5	3.95 + 0.54 × L	11.06 + 1.51 × L
MJF25	25.035	30		45	27.5	4.62 + 0.61 × L	12.94 + 1.69 × L
MJF28	28.035	33	2.5	48	30.5	8.35 + 0.67 × L	23.40 + 1.87 × L
MJF32	32.035	37		50	34.5	8.11 + 0.76 × L	22.72 + 2.12 × L
MJF35	35.035	40		54	37.5	9.29 + 0.82 × L	26.03 + 2.30 × L
MJF38	38.035	45		57	40.5	9.91 + 1.28 × L	27.79 + 3.57 × L
MJF40	40.035	48		60	42.5	10.99 + 1.55 × L	30.79 + 4.33 × L
MJF45	45.035	51		64	47.5	11.37 + 1.26 × L	31.88 + 3.54 × L
MJF50	50.035	57		70	52.5	13.18 + 1.64 × L	36.94 + 4.60 × L

Notes

1. Teflon liner permanently bonded to sleeve I.D.

(2) (a) Tolerances:
Aluminium ± 0.013
Stainless steel 0 to − 0.013
I.D. Size shall be inspected by plug Gauge.

3. Made to order only.

◯ Please consult MINEBEA for availability of bearings in this series.

Dimensions in mm

MINEBEA Part No.	L 〔± 0.2〕											L 〔± 0.3〕															L 〔± 0.5〕															
	05	06	07	08	09	10	12	14	16	18	20	22	24	26	28	30	32	34	36	38	40	42	44	46	48	50	52	54	56	58	60	62	64	66	68	70	72	74	76	78	80
MJF06	5	6	7	8	9	10																																			
MJF08	5	6	7	8	9	10	12	14																																	
MJF09	5	6	7	8	9	10	12	14	16	18	20																														
MJF10	5	6	7	8	9	10	12	14	16	18	20	22	24																												
MJF12	5	6	7	8	9	10	12	14	16	18	20	22	24	26																											
MJF14	5	6	7	8	9	10	12	14	16	18	20	22	24	26	28	30																									
MJF16	5	6	7	8	9	10	12	14	16	18	20	22	24	26	28	30	32	34																							
MJF18	5	6	7	8	9	10	12	14	16	18	20	22	24	26	28	30	32	34	36																						
MJF20	5	6	7	8	9	10	12	14	16	18	20	22	24	26	28	30	32	34	36	38																					
MJF22	5	6	7	8	9	10	12	14	16	18	20	22	24	26	28	30	32	34	36	38	40	42	44																		
MJF25	5	6	7	8	9	10	12	14	16	18	20	22	24	26	28	30	32	34	36	38	40	42	44	46	48	50															
MJF28				8	9	10	12	14	16	18	20	22	24	26	28	30	32	34	36	38	40	42	44	46	48	50	52	54	56	58	60										
MJF32				8	9	10	12	14	16	18	20	22	24	26	28	30	32	34	36	38	40	42	44	46	48	50	52	54	56	58	60										
MJF35						10	12	14	16	18	20	22	24	26	28	30	32	34	36	38	40	42	44	46	48	50	52	54	56	58	60	62	64	66	68	70					
MJF38						10	12	14	16	18	20	22	24	26	28	30	32	34	36	38	40	42	44	46	48	50	52	54	56	58	60	62	64	66	68	70					
MJF40									16	18	20	22	24	26	28	30	32	34	36	38	40	42	44	46	48	50	52	54	56	58	60	62	64	66	68	70	72	74	76	78	80
MJF45									16	18	20	22	24	26	28	30	32	34	36	38	40	42	44	46	48	50	52	54	56	58	60	62	64	66	68	70	72	74	76	78	80
MJF50									16	18	20	22	24	26	28	30	32	34	36	38	40	42	44	46	48	50	52	54	56	58	60	62	64	66	68	70	72	74	76	78	80

Copyright 2006, Minebea Co., Ltd.