LNR-1680DD

2023/03/22

Outline

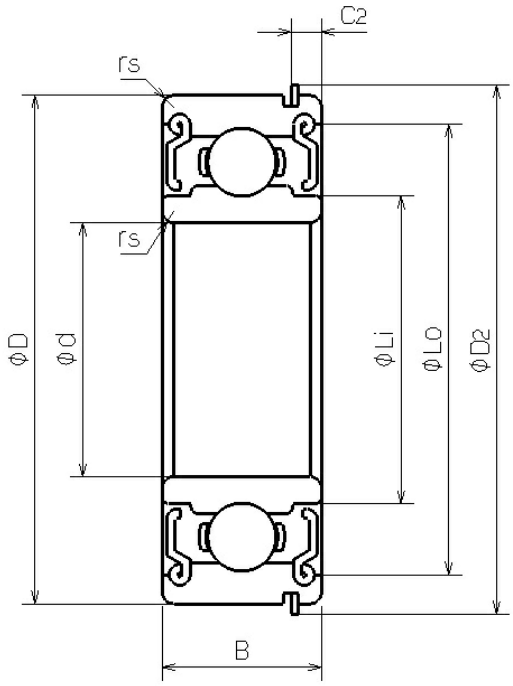

NMB Parts No.	LNR-1680DD
Metric or Inch	Metric
ISO/JIS	-
Material of Rings	Chromium Steel
Ring Type	[Radial] Stop ring
Inner Diameter (d) [mm]	8.000
Outer Diameter (D) [mm]	16.000
Width	

Copyright©MinebeaMitsumi Inc. All right reserved.

LNR-1680DD

2023/03/22

(B) [mm]	5.000
Chamfer (rs min) [mm]	0.200
Stop Ring Diameter (D2) [mm]	18.200
Stop Ring Location (C2) [mm]	0.950
Reference Diameter Outer (Lo) [mm]	14.180
Reference Diameter Inner (Li) [mm]	9.680
Ball Size (DW) [mm]	2.3813
Ball Complement (Z)	9
Dynamic Load Rating (Cr) [N]	1606
Static Load Rating (Cor) [N]	712
Inner Diameter (d) [in]	0.3150
Outer Diameter (D) [in]	0.6299
Stop Ring Diameter (D2) [in]	0.717
Stop Ring Location (C2) [in]	0.037

Copyright©MinebeaMitsumi Inc. All right reserved.