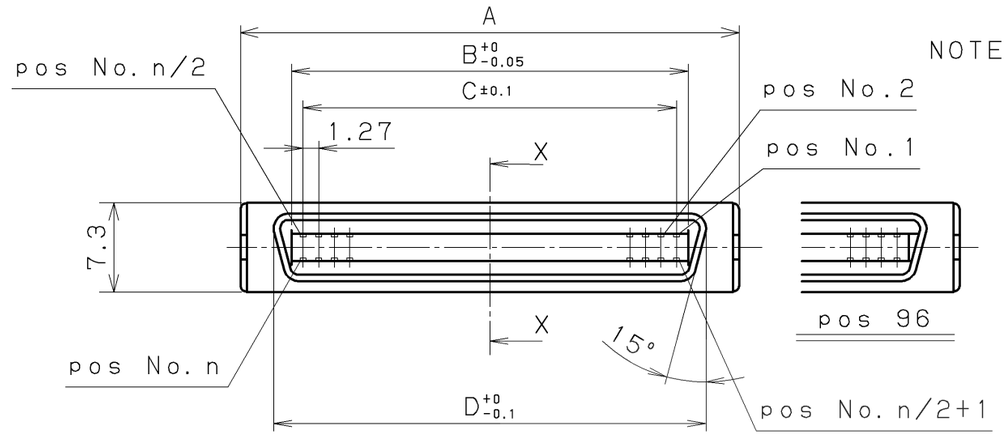

NOTE 1. CONTACT PLATING
CONTACT AREA:GOLD 0.2μm MIN.
TERMINATION AREA:GOLD
ALL OVER NICKEL PLATING

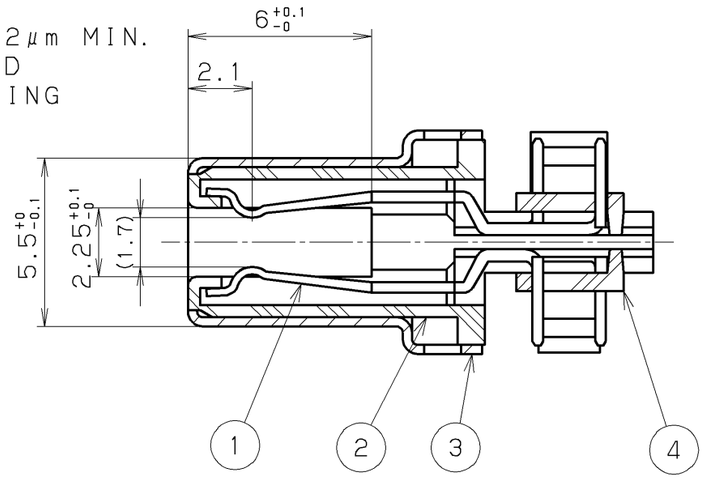

X-X SECTION (5/1)

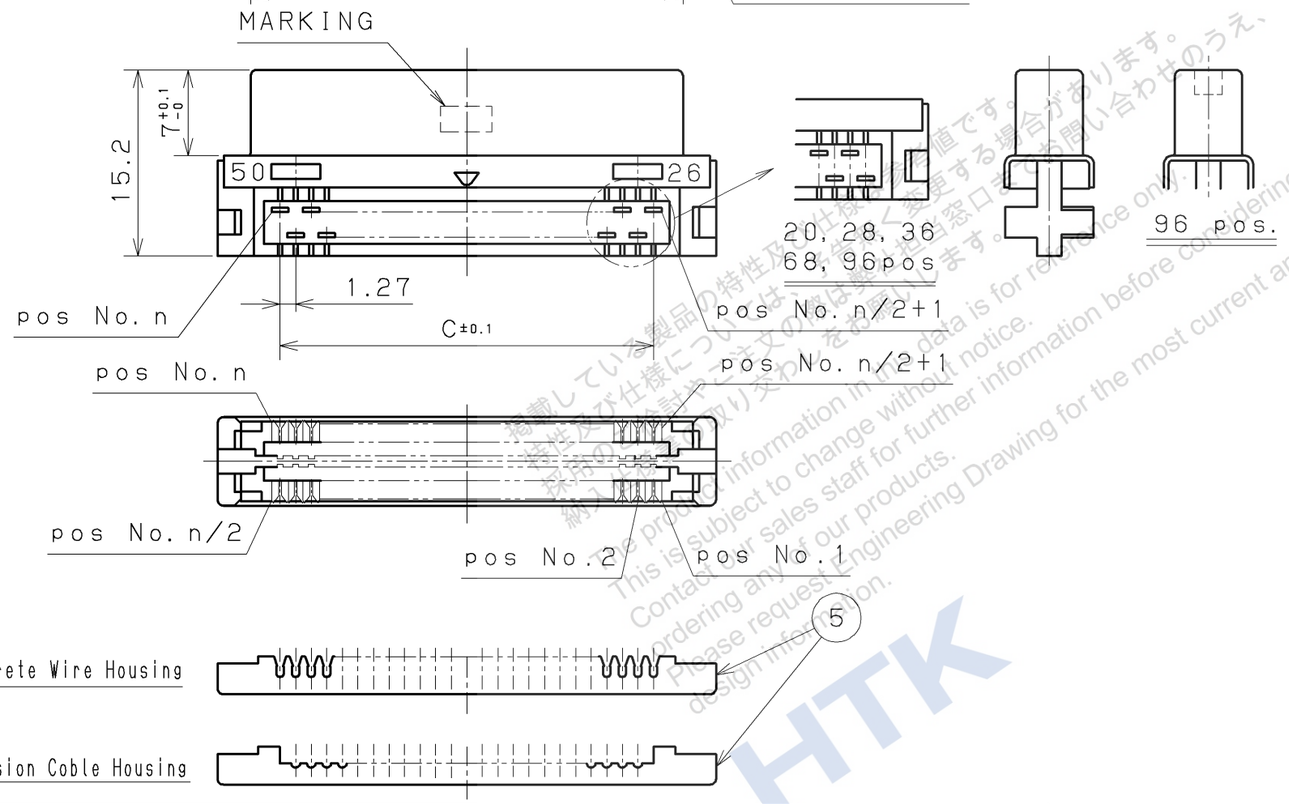

PART No.	Applicable Wire Size	
PCR-E( )FN+	#26AWG (1/0.4) Discrete Wire Housing Ø0.8~Ø1.0	FN:50pos. only
PCR-E( )FK+	#30AWG (7/0.1) Discrete Wire Housing Ø0.65~Ø0.8	
PCR-E( )FJ+	#28AWG (7/0.127) #30AWG (1/0.254) Discrete Wire Housing Ø0.65~Ø0.8	
PCR-E( )FH+	#32AWG (7/0.08) Discrete Wire Housing Ø0.35~Ø0.5	FH:68pos. only
PCR-E( )FD+	#30AWG (7/0.1) Cohesion Coble	
PCR-E( )FC+	#28AWG (7/0.127) #30AWG (1/0.254) Cohesion Coble	
PCR-E( )FB+	#30AWG (7/0.1) Discrete Wire Housing Ø0.5~Ø0.65	
PCR-E( )FA+	#28AWG (7/0.127) #30AWG (1/0.254) Discrete Wire Housing Ø0.5~Ø0.65	
PCR-E( )F+	#28AWG (7/0.127) #30AWG (1/0.254) Discrete Wire Housing Ø0.8~Ø1.0	

PART. No.	No. OF Pos.	A	B	C	D	CONTACT Pos. # MARKING
PCR-E96F( )+	96	69.9	61.61	1.27x(48-1)=59.69	64.51	1, 48.49, 96
PCR-E80F( )+	80	59.7	51.45	1.27x(40-1)=49.53	54.35	1, 40, 41, 80
PCR-E68F( )+	68	52.1	43.83	1.27x(34-1)=41.91	46.73	1, 34, 35, 68
PCR-E50F( )+	50	40.7	32.4	1.27x(25-1)=30.48	35.3	1, 25.26, 50
PCR-E36F( )+	36	31.8	23.51	1.27x(18-1)=21.59	26.41	1, 18, 19, 36
PCR-E28F( )+	28	26.7	18.43	1.27x(14-1)=16.51	21.33	1, 14, 15, 28
PCR-E20F( )+	20	21.65	13.35	1.27x(10-1)=11.43	16.25	1, 13, 14, 20

改版 LTR.	年月日 DATE	変更者 BY	変更内容 REV. DESCRIPT	番号 No.	部品名称 PART NAME	材質 MATERIAL	個数 QTY	処理 FINISH	備考 NOTE
				5	CABLE HOUSING	PBT (GF)	2	———	UL94V-0 BLACK
				4	SPEACER	PBT (GF)	2	———	UL94V-0 BLACK
3				3	SHELL	STEEL	1	NICKEL PLATED	———
2				2	INSULATOR	PBT (GF)	1	———	UL94V-0 BLACK
1				1	CONTACT	PHOSPHOR BRONZE	No. OF POS.	SEE NOTE 1	———

年月日 DATE	尺度 SCALE	単位 UNIT	3角法
MAR.31 (2004)	2/1	mm (INCH)	3RD. A. P

製図 DR.	設計 DE.	検図 CHK.	検図 CHK.	承認 APP.
T. KAWANO	T. KAWANO	T. SOGO	K. HOMMA	S. FURUSAWA

本多通信工業株式会社
HONDA TSUSHIN KOGYO CO., LTD.

名称 NAME: 1.27mm SPACING PCR-E TYPE IDC FEMALE CONNCTOR (RoHS)

製番 PART NO.: PCR-E( )F( )+

ID= PCR-E@F@+ E0

掲載している製品の特性及び仕様は参考値です。特性及び仕様については、ご注文の際は製品担当窓口までお問い合わせのうえ、採用の可否を計ってご注文の際は製品担当窓口までお問い合わせのうえ、納入仕様書を取り交わしをお願いします。
The product information in this data is for reference only. This is subject to change without notice. Contact our sales staff for further information before considering or ordering any of our products. Please request Engineering Drawing for the most current and accurat design information.
HTK