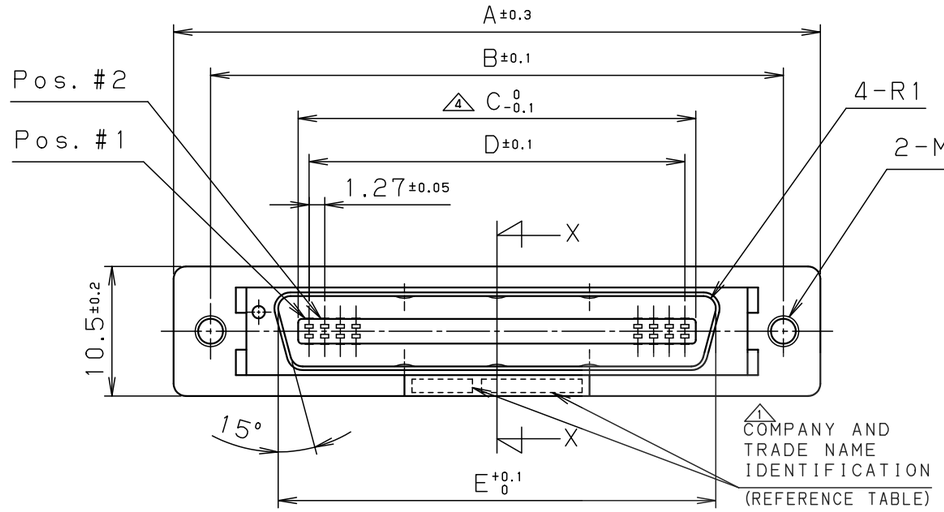

NOTE 1. CONTACT PLATING
CONTACT AREA : GOLD 0.2μm MIN.
TERMINATION AREA : GOLD
ALL OVER NICKEL PLATING

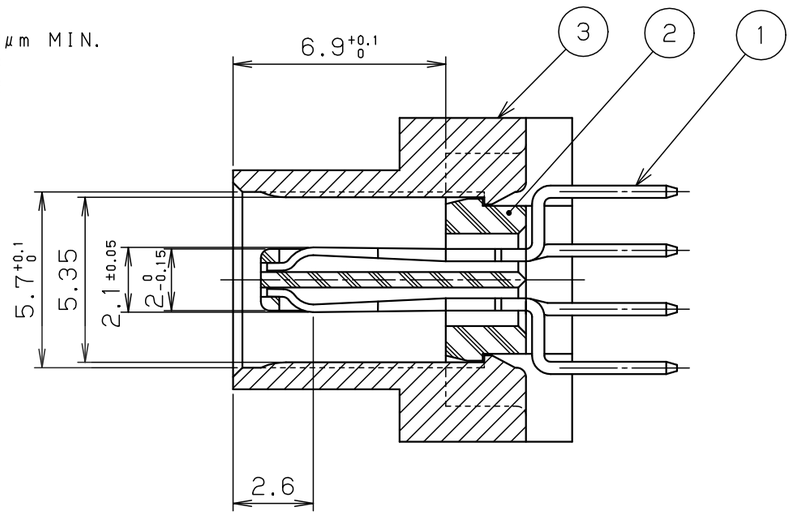

X-X SECTION (5/1)

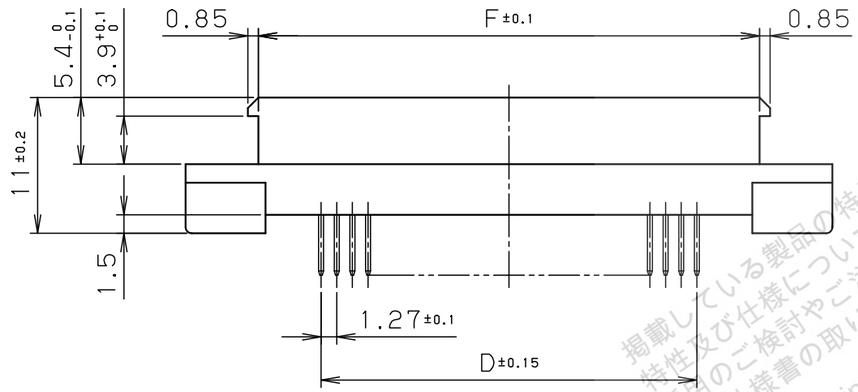

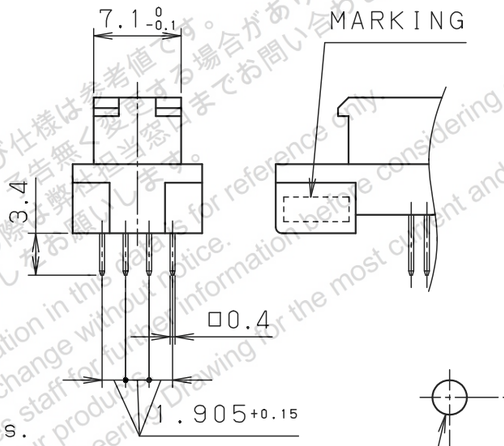

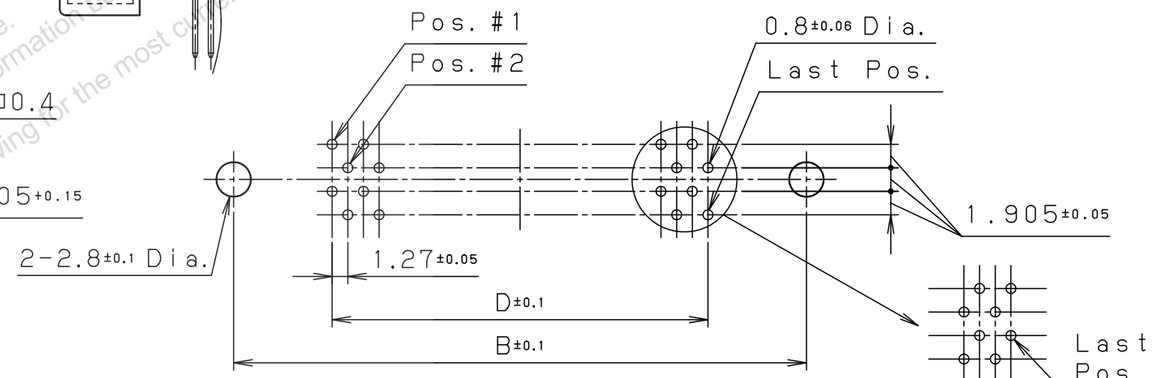

RECOMMENDED P.C.B. LAYOUT (CONNECTOR SIDE)
P.C.B. THICKNESS : 1.6mm

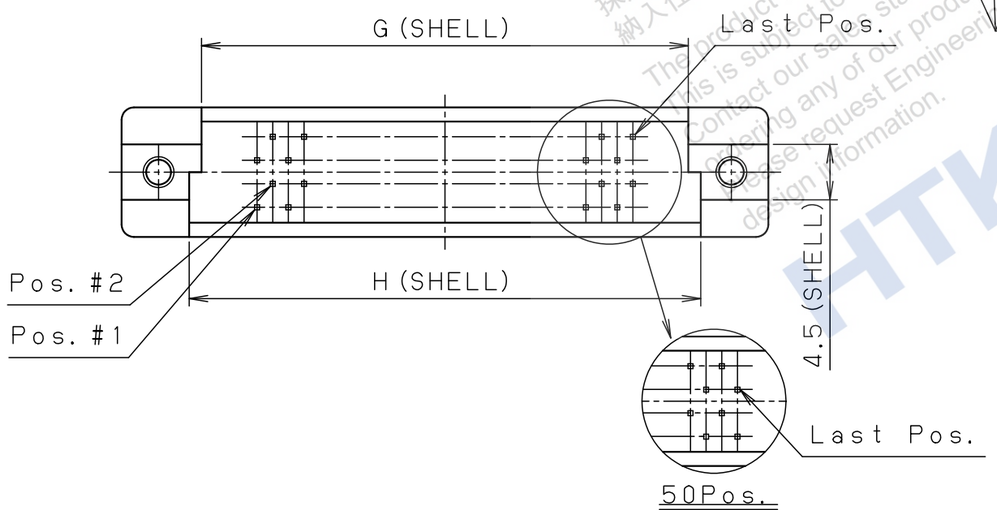

RoHS compliant

LTR.	DATE	BY	REV. DESCRIPT	No.	PART NAME	MATERIAL	QTY	FINISH	NOTE
4	Aug.20 2024	S. N	Tolerance Change						
3	APR.03 2012	K. E	CHANGE IDENTIFICATION	3	SHELL	ZINC DIE CASTING	1	NICKEL PLATED OVER COPPER	————
2	Aug.23 2011	Y. A	CHANGE IDENTIFICATION	2	INSULATOR	PBT (GF)	1	————	UL94V-0 BLACK
1	Jan.13 2011	Y. A	CHANGE IDENTIFICATION	1	CONTACT	PHOSPHOR BRONZE	No. of Pos.	SEE NOTE 1	————

DATE	SCALE	UNIT	3RD. A. P
Mar.31 (2004)	2/1	mm (INCH)	

APP. DATE&REV.

DR.	DE.	CHK.	CHK.	APP.
S. NAMIKI	S. SEKI	S. YOSHIDA	—	T. SOGO

HTK HONDA TSUSHIN KOGYO CO., LTD.

NAME	1.27mm SPACING PCR-E TYPE STRAIGHT DIP MALE CONNECTOR (RoHS)	
PART NO.	PCR-E ( ) MD+	REV. 4D

No. of Pos.	PART NO.	A	B	C	D	E	F	G	H	COMPANY AND TRADE NAME IDENTIFICATION
96	PCR-E96MD+	81.66	75.66	61.46	1.27x47=59.69	64.71	69.86	68.69	70.69	HONDA PCR-E96MD
80	PCR-E80MD+	71.50	65.50	51.30	1.27x39=49.53	54.55	59.70	58.53	60.53	HONDA PCR-E80MD
68	PCR-E68MD+	63.88	57.88	43.68	1.27x33=41.91	46.93	52.08	50.91	52.91	HONDA PCR-E68MD
50	PCR-E50MD+	52.45	46.45	32.25	1.27x24=30.48	35.50	40.65	39.48	41.48	HTK PCR-E50MD
36	PCR-E36MD+	43.56	37.56	23.36	1.27x17=21.59	26.61	31.76	30.59	32.59	HONDA PCR-E36MD
28	PCR-E28MD+	38.48	32.48	18.28	1.27x13=16.51	21.53	26.68	25.51	27.51	HTK PCR-E28MD
20	PCR-E20MD+	33.40	27.40	13.20	1.27x 9=11.43	16.45	21.60	20.43	22.43	HTK PCR-E20MD

掲載している製品の特性及び仕様は参考値です。
特性及び仕様については、予告無く変更する場合があります。
採用のご検討やご注文の際は弊社担当窓口までお問い合わせのうえ、
納入仕様書の取り交わしをお願いします。
The product information in this catalog is for reference only.
This is subject to change without notice.
Contact our sale staff for further information
ordering any of our products.
Please request Engineering Drawing for the most
design information.
HTK

ID= PCR-E@MD+ ED

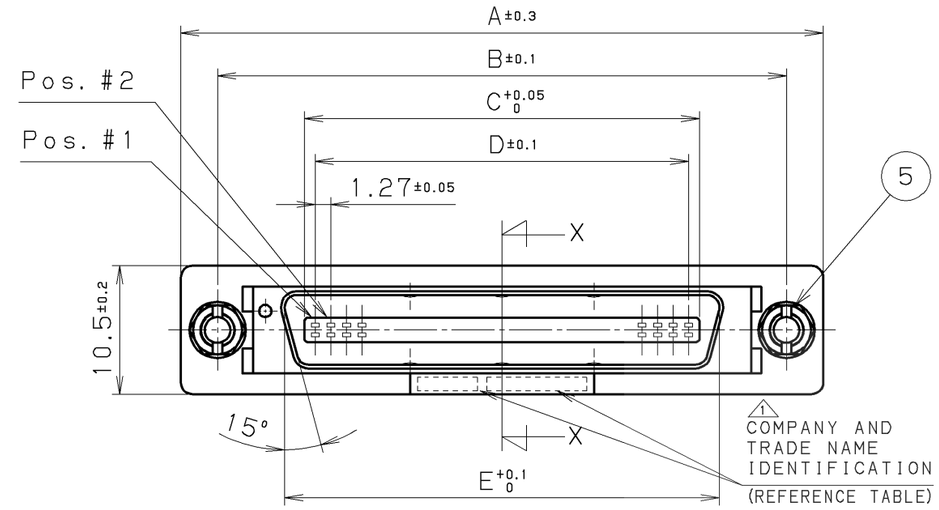

NOTE 1.FINISH
CONTACT AREA : GOLD 0.2μm MIN.
TERMINATION AREA : GOLD 0.05μm
ALL OVER NICKEL PLATING

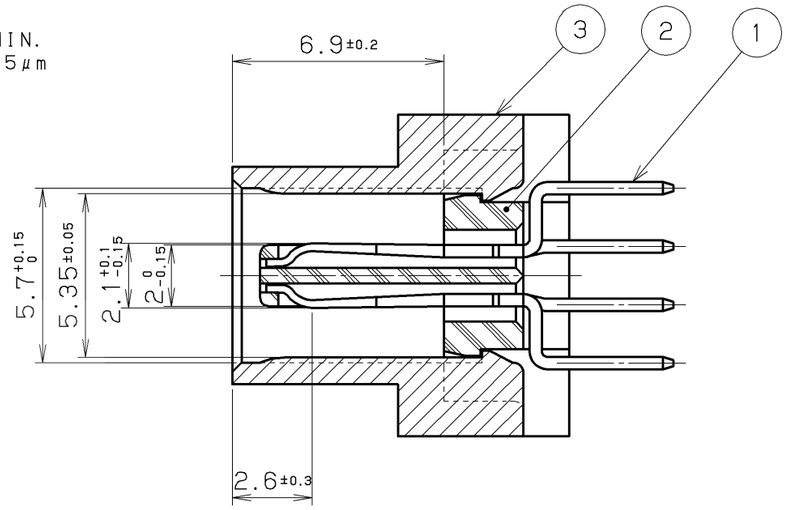

X-X SECTION (5/1)

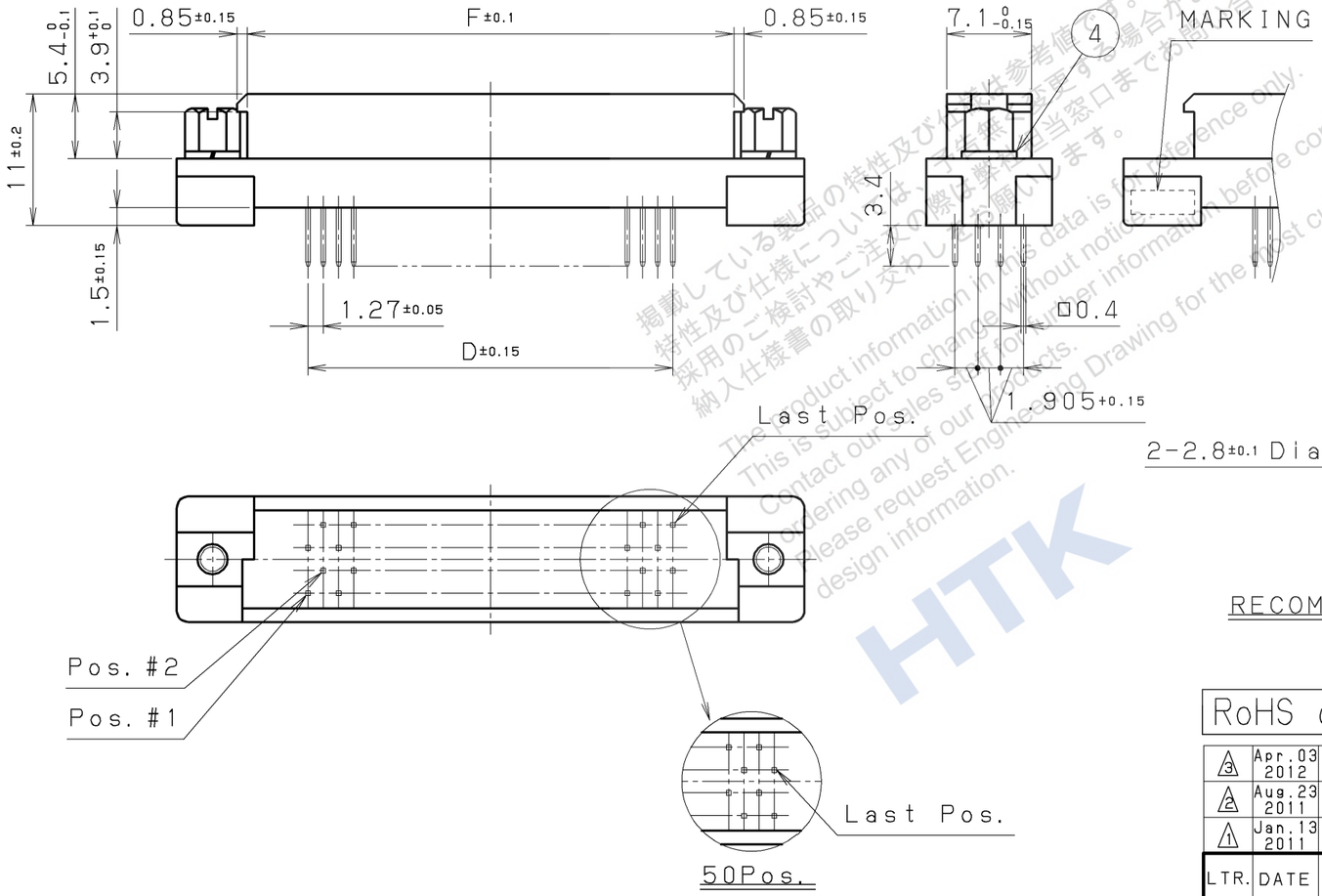

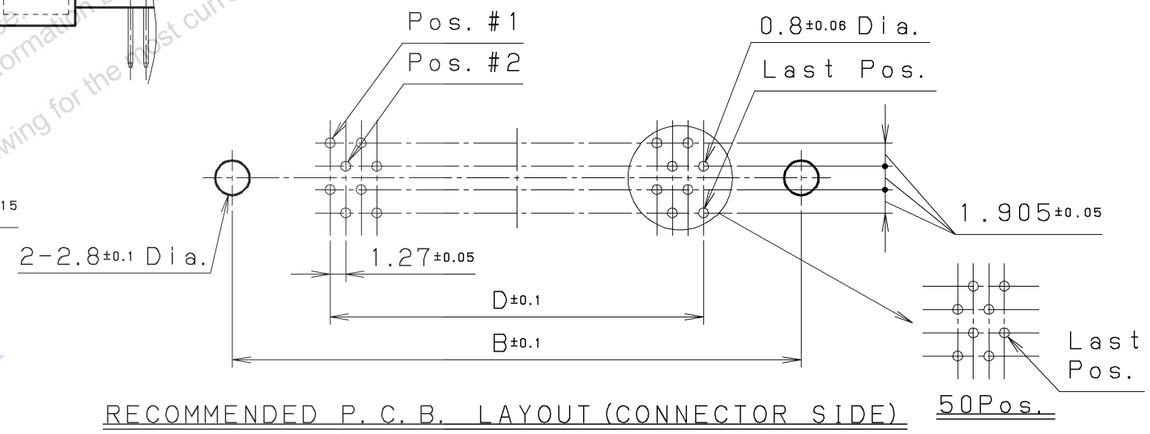

RECOMMENDED P. C. B. LAYOUT (CONNECTOR SIDE)
P. C. B. THICKNESS:1.6mm

掲載している製品の特性及び仕様は参考値です。
特性及び仕様については、予告無しに変更する場合があります。
採用のご検討やご注文の際は弊社当窓口までお問い合わせのうえ、
納入仕様書の取り交わしをお願いします。
The product information in this data is for reference only.
This is subject to change without notice.
Contact our sales staff for further information before considering or
ordering any of our products.
Please request Engineering Drawing for the most current and accurat
design information.
HTK

RoHS compliant

LTR.	DATE	BY	REV. DESCRIPT
3	Apr.03 2012	K. E	CHANGE IDENTIFICATION
2	Aug.23 2011	Y. A	CHANGE IDENTIFICATION
1	Jan.13 2011	Y. A	CHANGE IDENTIFICATION

No.	PART NAME	MATERIAL	QTY	FINISH	NOTE
5	SCREW LOCK	STEEL	2	NICKEL PLATED	———
4	SPRING WASHER	STEEL	2	NICKEL PLATED	———
3	SHELL	ZINC DIE CASTING	1	NICKEL PLATED OVER COPPER	———
2	INSULATOR	PBT (GF)	1	———	UL94V-0 BLACK
1	CONTACT	PHOSPHOR BRONZE	No. of POS.	SEE NOTE 1	———

DATE	SCALE	UNIT	3RD. A. P
May.21 (2004)	2/1	mm (INCH)	

APP. DATE&REV.

DR.	DE.	CHK.	CHK.	APP.
K. ENDO	K. ENDO	S. IIJIMA	S. WATANABE	Y. KATO

HONDA TSUSHIN KOGYO CO., LTD.

NAME: 1.27mm SPACING PCR-E TYPE STRAIGHT DIP MALE CONNECTOR (RoHS)

PART NO.: PCR-E ( ) MD-SL+ REV. 3C

No. of Pos.	PART NO.	A	B	C	D	E	F	COMPANY AND TRADE NAME IDENTIFICATION	
50	PCR-E50MD-SL+	52.45	46.45	32.25	1.27x24=30.48	35.50	40.65	HTK PCR-E50MD	3
36	PCR-E36MD-SL+	43.56	37.56	23.36	1.27x17=21.59	26.61	31.76	HONDA PCR-E36MD	
28	PCR-E28MD-SL+	38.48	32.48	18.28	1.27x13=16.51	21.53	26.68	HTK PCR-E28MD	1
20	PCR-E20MD-SL+	33.40	27.40	13.20	1.27x 9=11.43	16.45	21.60	HTK PCR-E20MD	2

ID= PCR-E@MD-SL+ EC