MITSUMI

The synchronous rectification control IC for LLC resonant converter

MM3669 Series

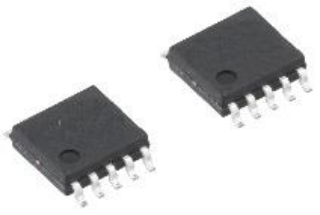

Overview

MM3669 is secondary side synchronous rectification control IC to drive MOSFETs in isolated AC-DC converter. It is able to achieve very high efficiency by replacing secondary rectifier diode with MOSFET and MM3669. It is possible to correspond to various efficiency restrictions. And it is effective for the miniaturization of the power supply by the heat sink reduction and so on.

MM3669 has 2 gate driver, this constitution is specialized in Half-Bridge LLC resonant converter.

MM3669 controls turn-ON/OFF of MOSFET by detecting the voltage between drain and source of MOSFET. This turn-OFF threshold voltage is adjustable by the external resistor.

MM3669 has safety controller for LLC converter, as an example, preventing that VG is turned on at the same time.

This IC uses SOP-10A package and supports flow conditions.

Features

- 2 channel driver for Half-Bridge LLC resonant converter
- Adjustable Turn-Off threshold each channel
- Control system for safety

Main specifications

- Operating voltage range : 7.5V to 15V
- Gate output voltage range : 7.5V to 15V
- Operating frequency : ～500kHz

Packages

- SOP-10A

Application

- TV
- High-Power AC-DC Adaptor
- High-Power SMPS

MinebeaMitsumi
Passion to Create Value through Difference

Mitsumi Search
https://mtm-sec.mitsumi.co.jp/web/ic/

Mitsumi Electric CO.,LTD.
Semiconductor Business Division
Strategy Engineering Department
tel:+81-46-230-3470

■ All brand names, logos, product names, trade names and service names described here are trademarks or registered trademarks of their respective companies or organizations.
■ Any products mentioned in this leaflet are subject to any modification in their appearance and others for improvements without prior notification.
■ The details listed here are not a guarantee of the individual products at the time of ordering. When using the products, you will be asked to check their specifications.

March, 2022 Rev.0

Model Name

M M 3 6 6 9 A F F X H

シリーズ名 (A) (B) (C) (D) (E)

(A) Function Type
(B) Package : SOP-10A
(C) Packing specification : F housing
(D) E : Emboss Tape Y : Emboss Tape + Moisture-proof packaging
(E) Halogen-free

Block Diagram

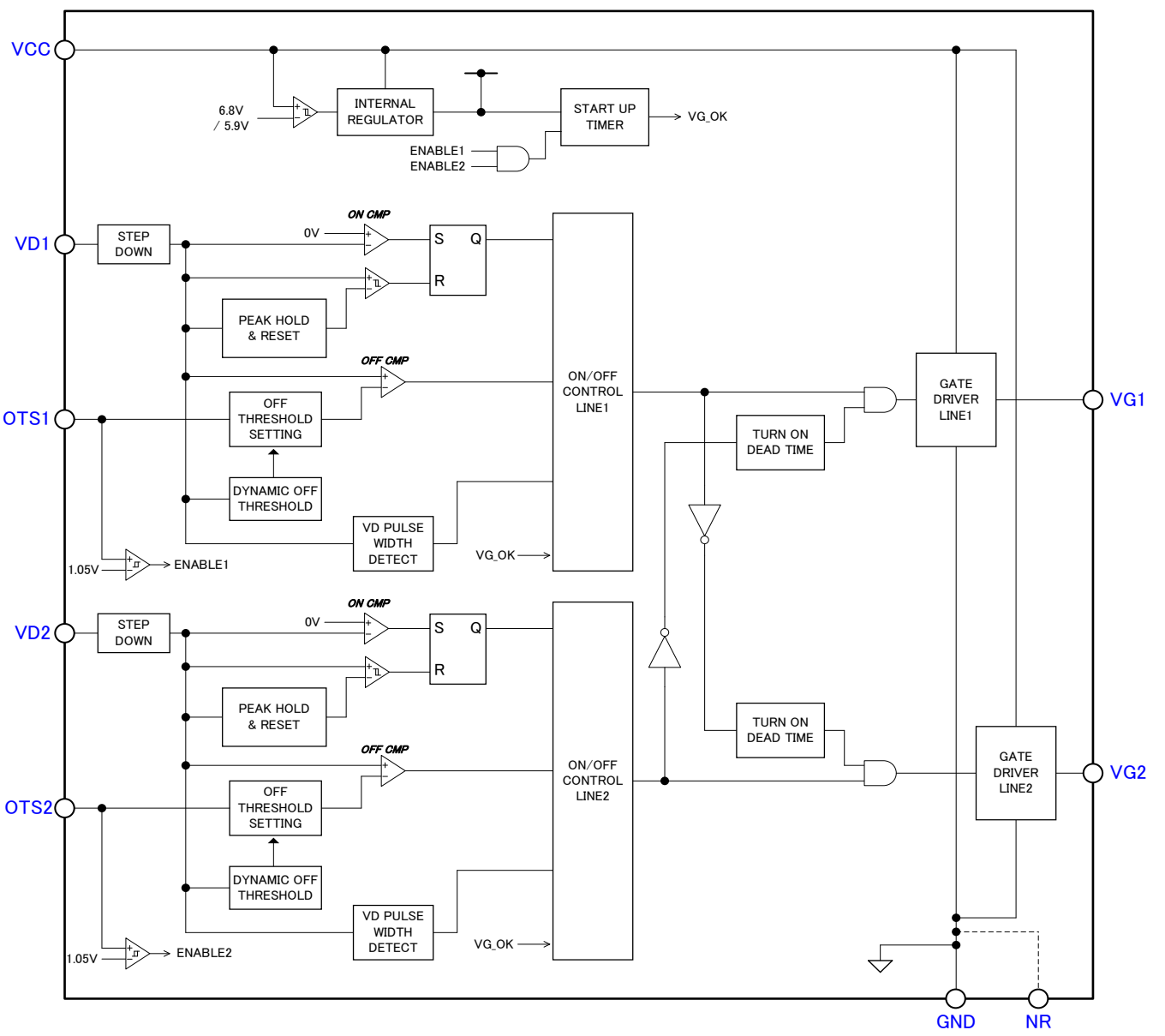

Pin Configuration

■ SOP-10A

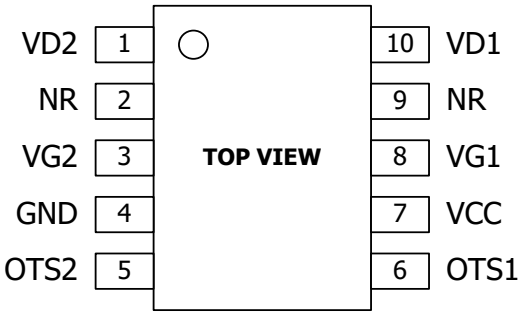

SOP-10A

Pin No.	Pin name	Function
1	VD2	MOSFET Drain Voltage Detection (Line2)
2	NR	Noise Reduction
3	VG2	Gate Driver Output (Line2)
4	GND	Ground / MOSFET Source Connection
5	OTS2	Turn-Off Threshold Setting (Line2) / VG Output Disable
6	OTS1	Turn-Off Threshold Setting (Line1) / VG Output Disable
7	VCC	IC Power Input / Gate Driver Voltage Sourc
8	VG1	Gate Driver Output (Line1)
9	NR	Noise Reduction
10	VD1	MOSFET Drain Voltage Detection (Line1)

Absolute Maximun Ratings

(Ta=25℃, unless otherwise specified)

Item	Symbol	Min.	Max.	Unit
Supply Voltage	V_{CCMAX}	-0.3	17.0	V
VD Input Voltage	V_{VDMAX}	*1	17.0	V
VD Output Current	I_{VDMAX}	-1	-	mA
GATE Output Voltage	V_{GMAX}	-0.3	VCC	V
Storage Temperature	Tstg	-50	150	℃
Power Dissipation *2	Pd	-	1200	mW

Note

*1 When VD pin input voltage is shifted to minus, parasitic diode of ESD protection device is turned-on. To protect the parasitic diode, please adjust the external resistor to reduce the VD pin output current under 1mA.

*2 Mounting condition:
FR-4, 70×70×1.6mm, Double-sided PCB, Copper area is 90%

Recommended Operating Conditions

(Ta=25℃, unless otherwise specified)

Item	Symbol	Min.	Max.	Unit
Operating Ambient Temperature	Topr	-40	105	℃
Operating Supply Voltage	V_{CCOPR}	7.5	15.0	V
VD Pin Peak Voltage	V_{VDPEAK}	4.5	15.0	V
Switching Frequency	f_{SW}	-	500	kHz
OTS Input Voltage	V_{OTS}	-	2.0	V

Electrical Characteristics

(unless otherwise noted, VCC=12V, Ta=25℃)

項目	記号	条件	最小	標準	最大	単位	*3
Supply Section							
VCC Turn On Threshold	V_{CC_START}		6.4	6.8	7.2	V	A
VCC Turn Off Threshold	V_{CC_STOP}		5.5	5.9	6.3	V	A
IC Supply Current	I_{CC}	Cload=0pF, fsw=100kHz	-	1.5	-	mA	C
Gate Driver Output							
VG Output High Voltage	V_{GH}	IG=25mA	11.6	11.9	-	V	C
VG Output Low Voltage	V_{GL}	IG=-25mA	-	0.05	0.1	V	C
Rise Time	t_R	Cload=10nF VG=2V→9V	-	70	120	ns	D
Fall Time	t_F	Cload=10nF VG=9V→2V	-	45	75	ns	D
Turn-On Propagation Delay	t_{DON}	Cload=10nF, R_{OTS}=100kΩ VD=V_{TH_ON}→VG=2V	-	150	280	ns	D
Turn-Off Propagation Delay	t_{DOFF}	Cload=10nF VD=V_{TH_OFF}→VG=9V	-	100	220	ns	D
Drain Voltage Detector							
Turn-On Threshold	V_{TH_ON}		-0.2	0	0.2	V	B
Turn-Off Threshold Voltage	V_{TH_OFF}	R_{OTS}=39kΩ	-12	-6	0	mV	B
		R_{OTS}=100kΩ	13	19	25	mV	B
VD Input Resistance	R_{VD}	VD=12V	12	15	18	kΩ	A
Timer Section							
VD Peak Pulse Width Detect	t_{VDPW}		0.49	0.62	0.84	us	D
Dynamic Off-Threshold Time	t_{DOT}	fsw=100kHz	1.8	2.4	3.0	us	D
		fsw=300kHz	0.81	1.05	1.29	us	D
Turn On Dead Time	t_{DEAD}		-	450	-	ns	D
Gate Enable Mode							
Gate Enable Mode Voltage	V_{ENABLE}		0.9	1.05	1.2	V	E

*3 The test circuit symbols.

Test Circuit

A

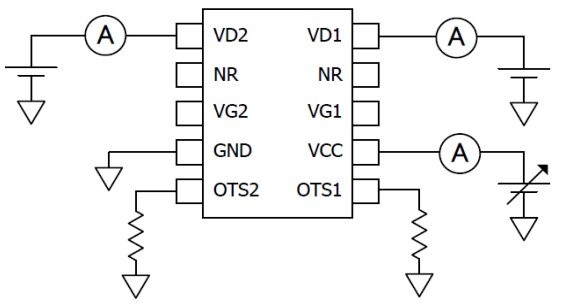

B

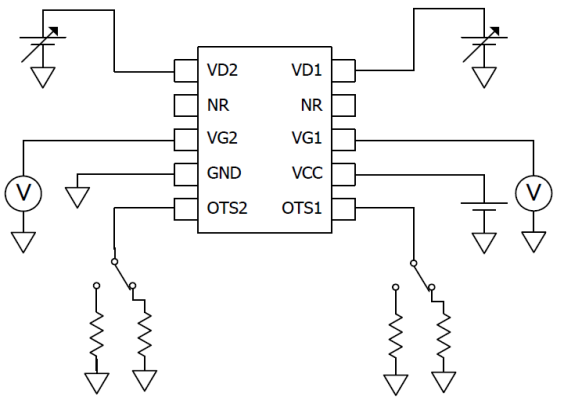

C

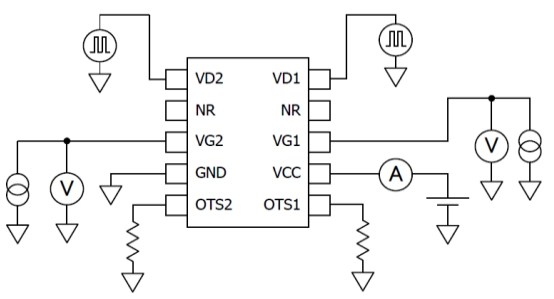

D

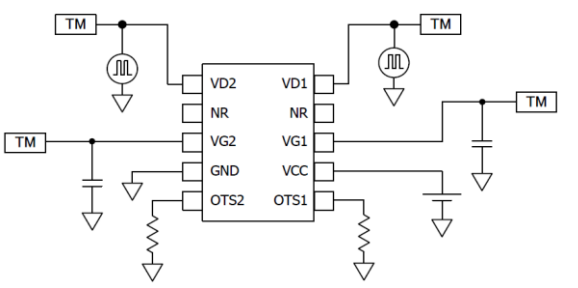

E

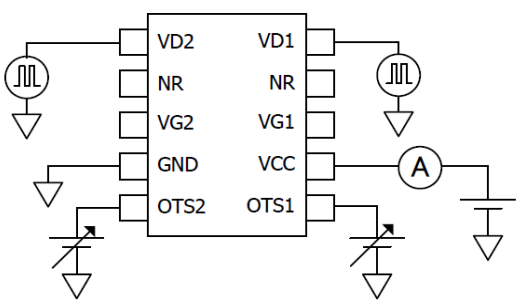

Timing Chart

IC operation start ~ VG output disable ~ VG output enable ~ IC operation stop

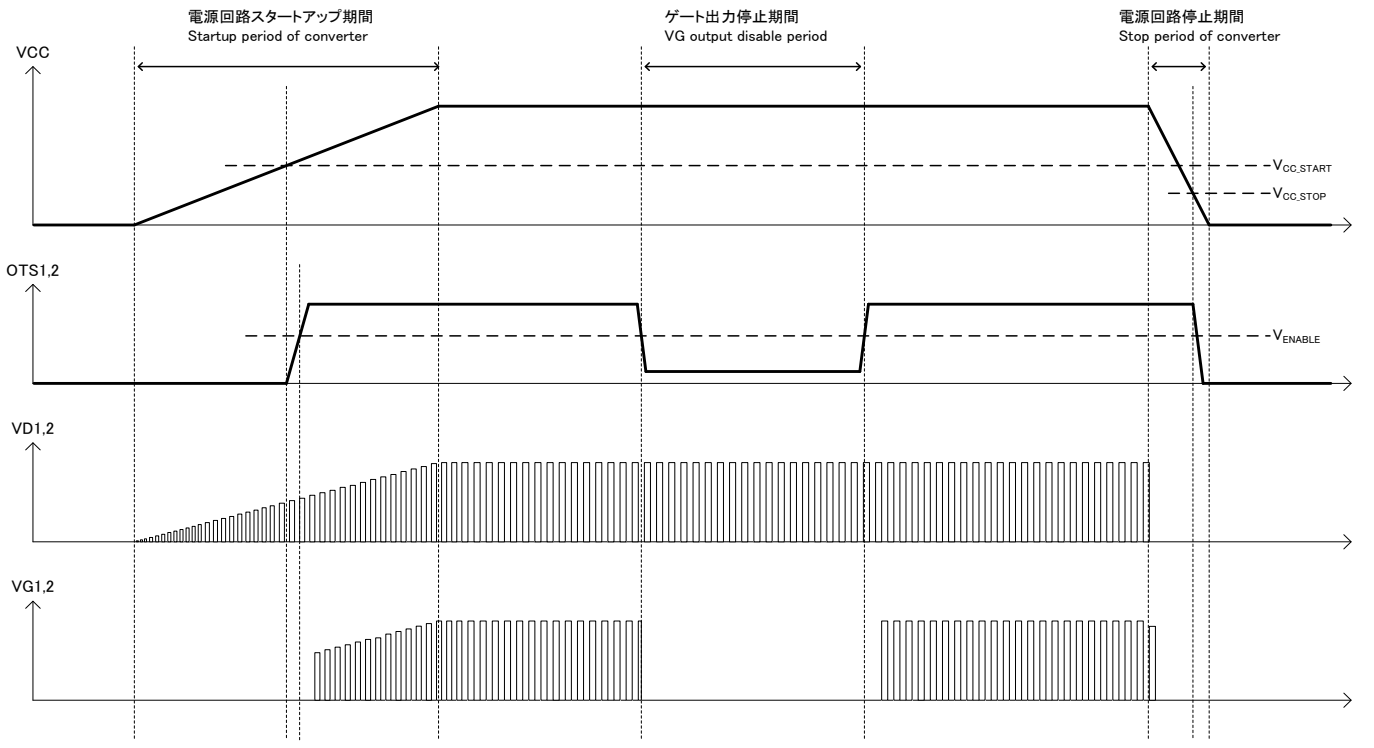

Operation for the VD input signal

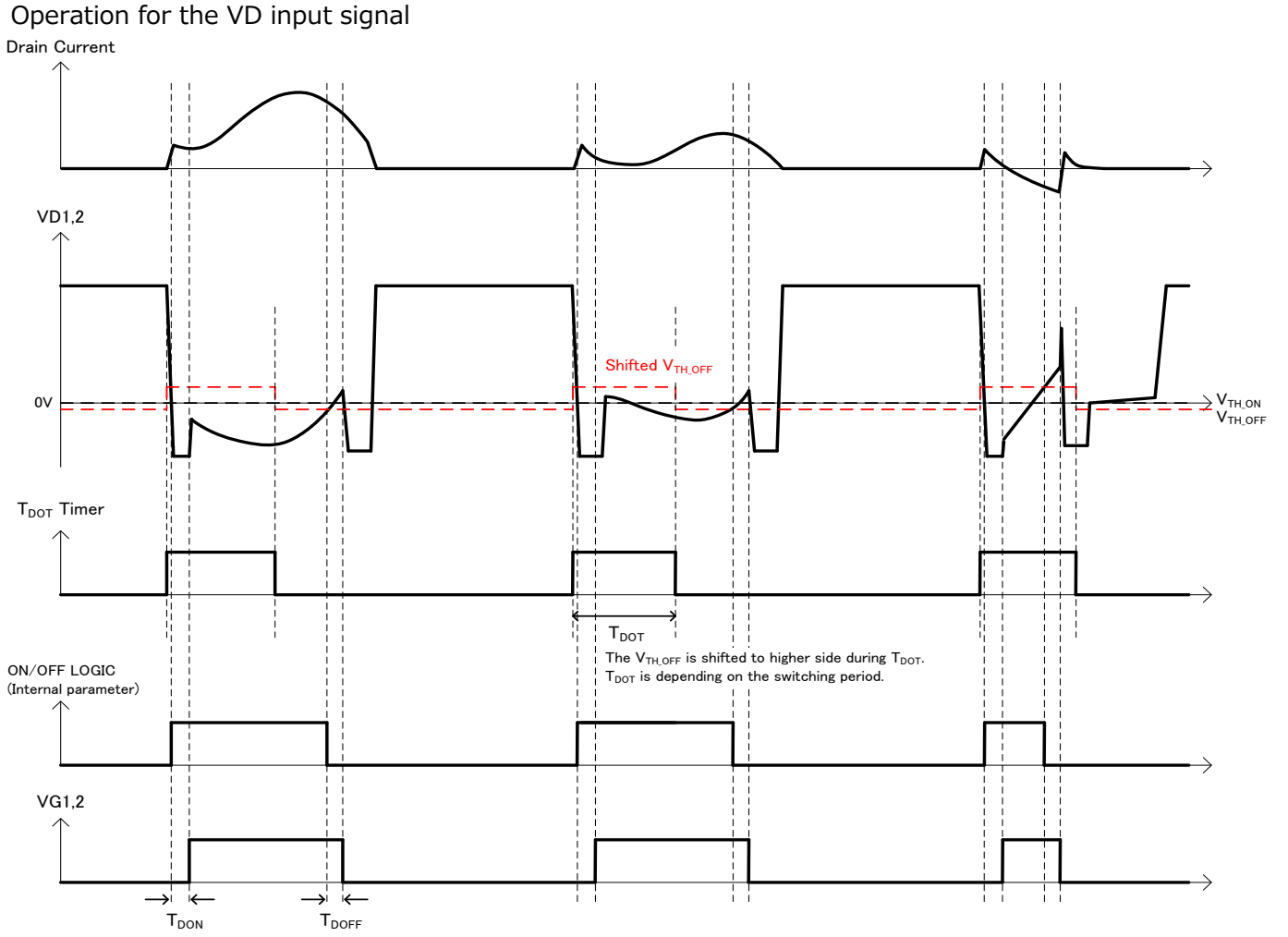

Timing Chart

Prevention of the turn-on of the VG at the same time

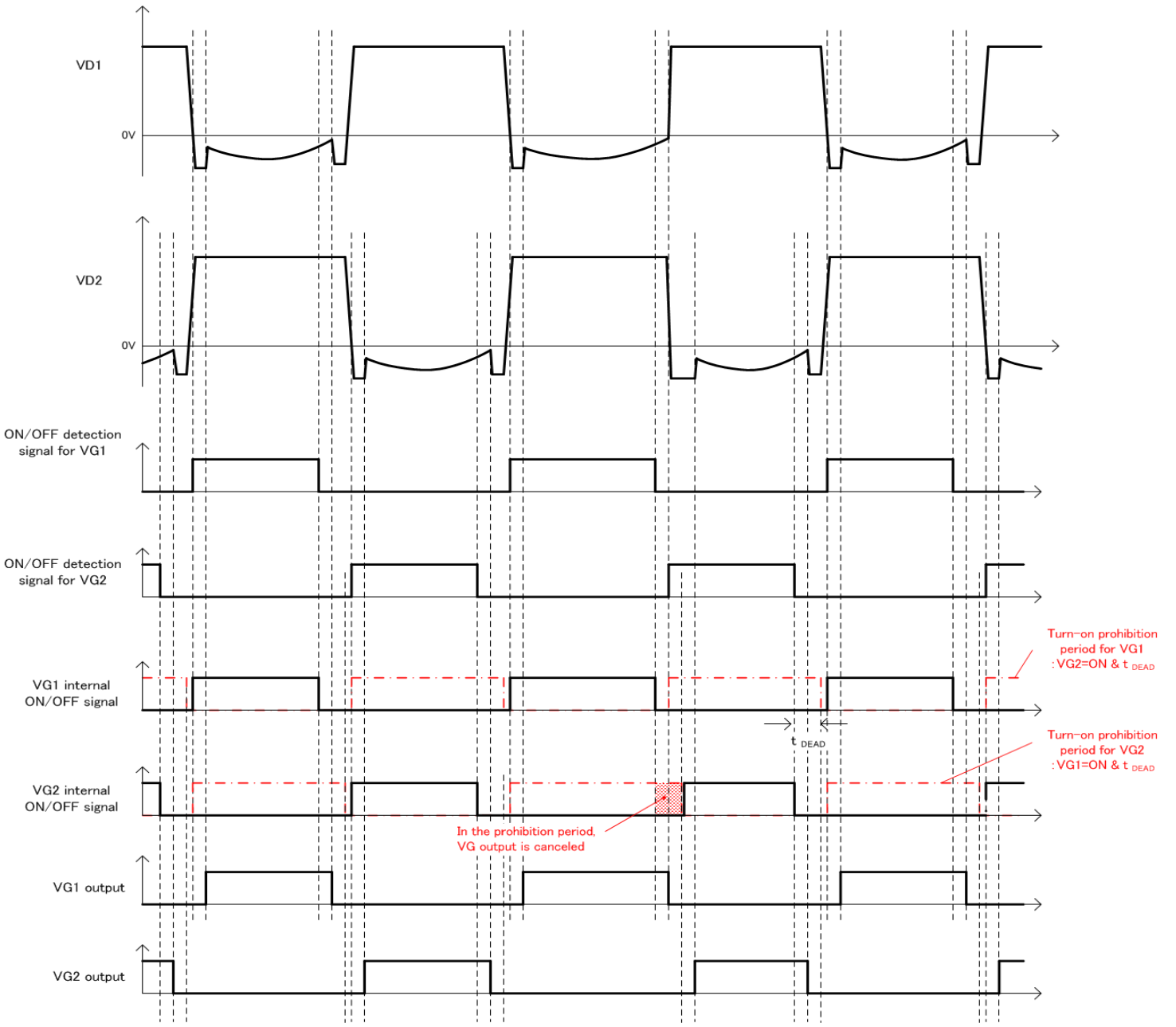

Typical Application Circuit

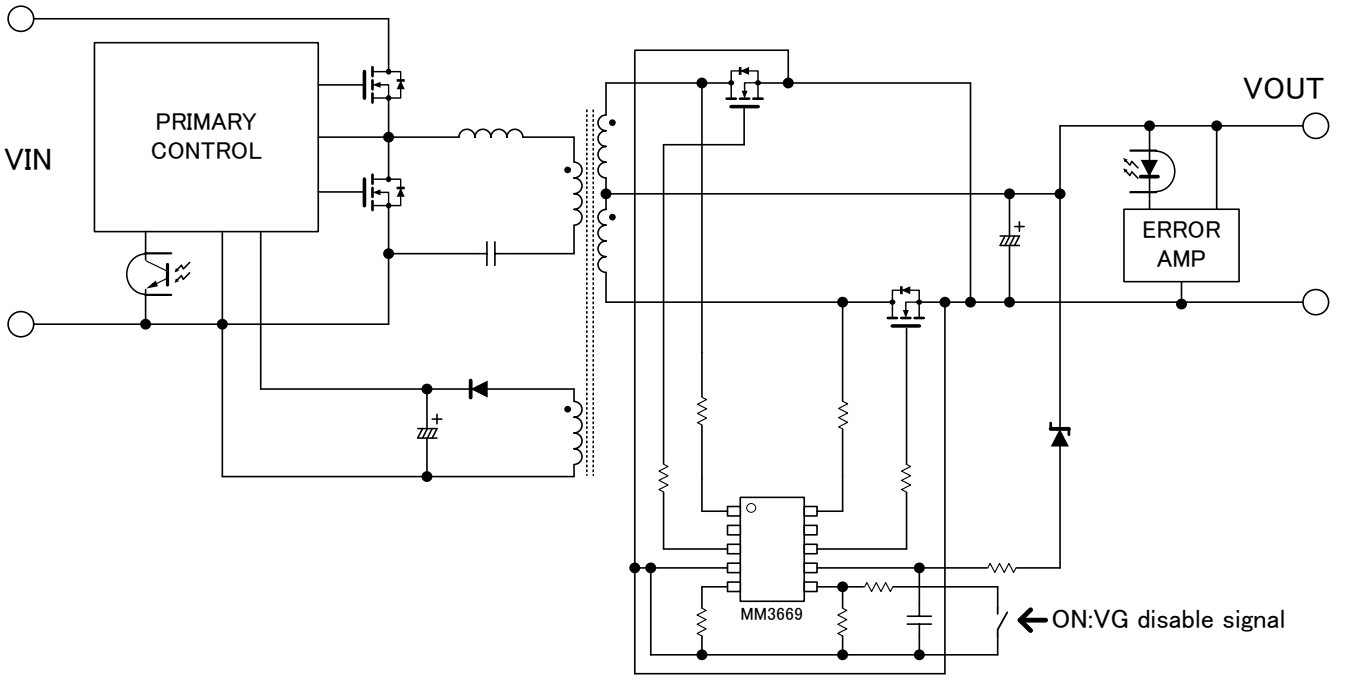

Application hints

The above circuit shows one example of connection of MM3669.

Constants of the best wiring and parts in the surrounding are different depending on the specification of the power supply. Please use MM3669 after it examines enough.

Please refer to an application note for the setting methods of neighboring parts.

Typical Performance Characteristics

(Ta=25℃, unless otherwise specified)

Temp. VS. VCC Turn On / Off Threshold

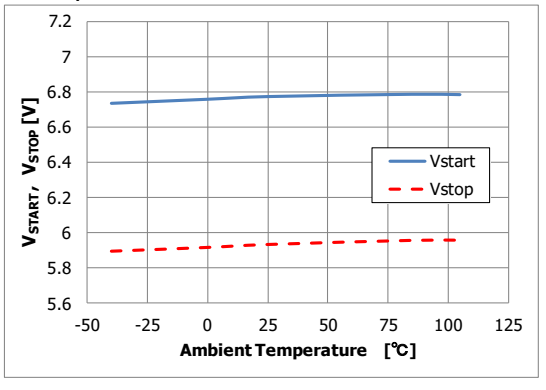

Temp. VS. IC Supply Current

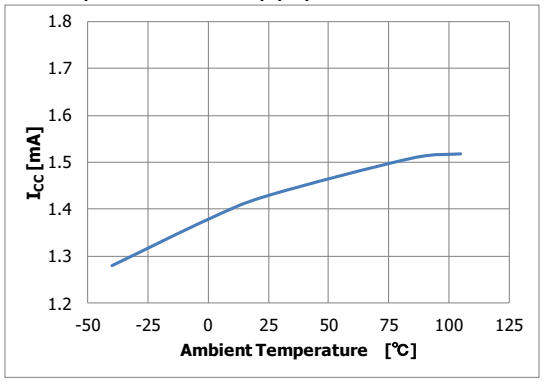

Temp. VS. VG Output High Voltage

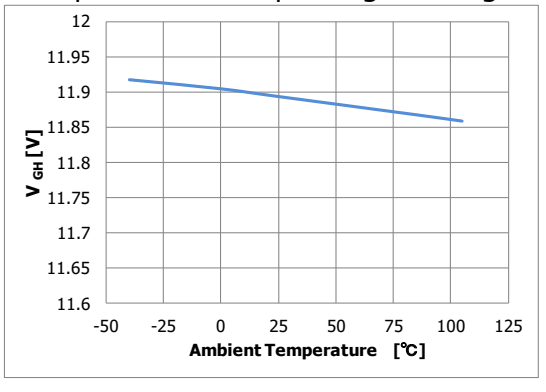

Temp. VS. VG Output Low Voltage

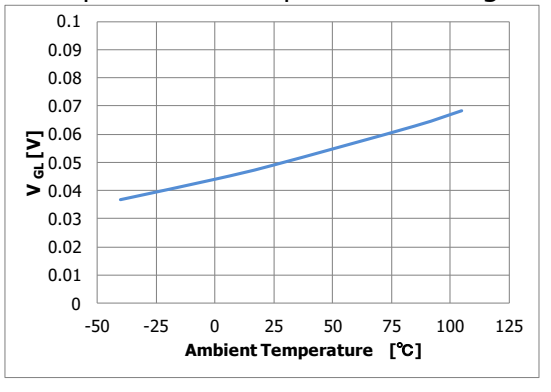

Temp. VS. Rise / Fall Time

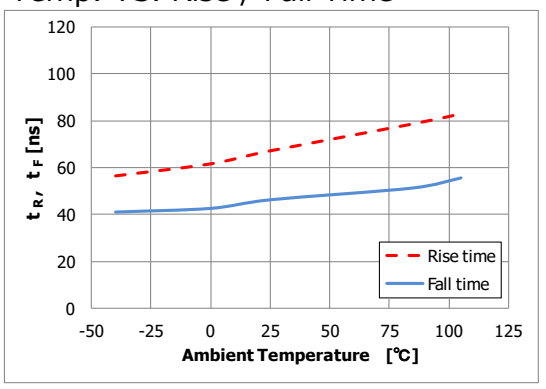

Temp. VS. Turn- On/ Off Propagation Delay

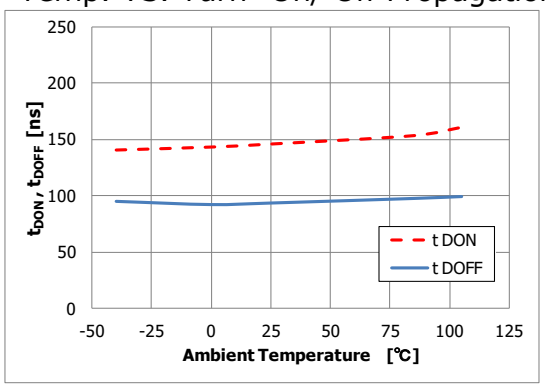

Typical Performance Characteristics

(Ta=25℃, unless otherwise specified)

Temp. VS. Turn-On Threshold Voltage

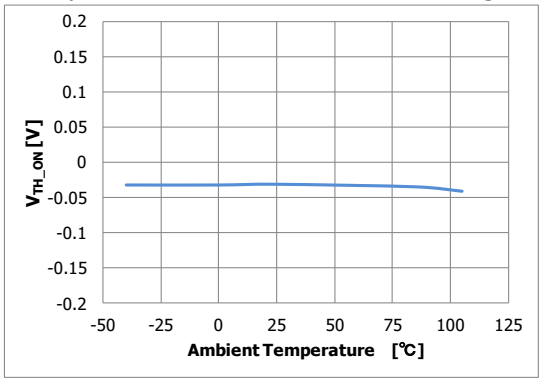

Temp. VS. Turn-Off Threshold Voltage

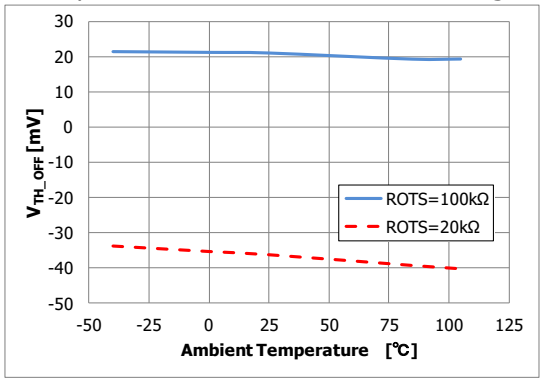

R_{OTS} VS. Turn Off Threshold Voltage

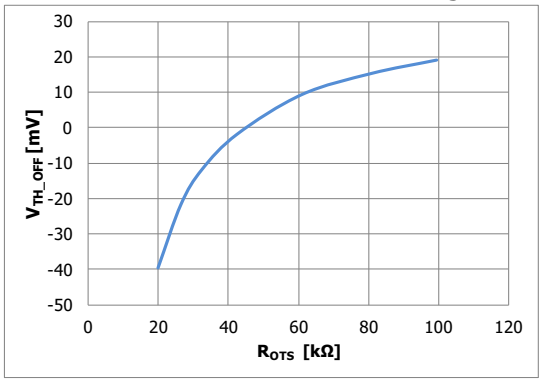

VD Input Voltage VS. VD Input Current

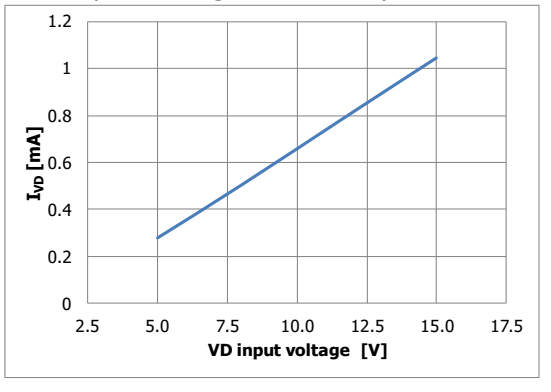

Temp. VS. VD Peak Pulse Width Detect

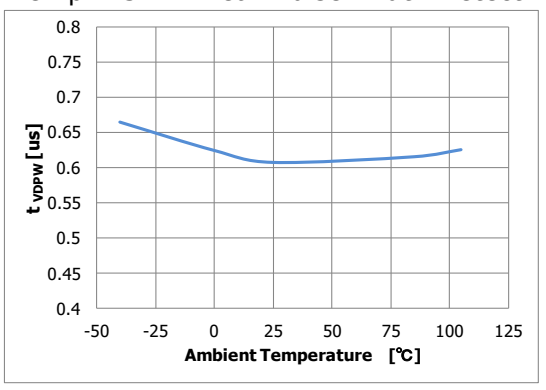

Temp. VS. Dynamic Off-Threshold Time

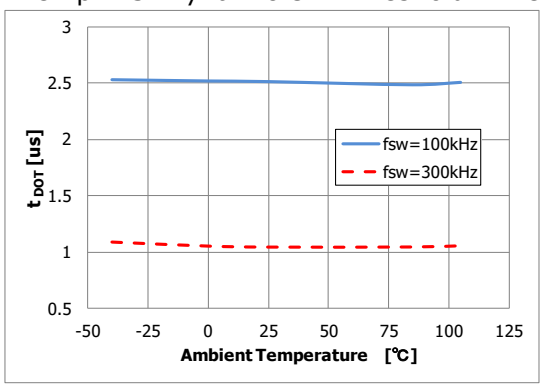

Temp. VS. Gate Enable Mode Voltage

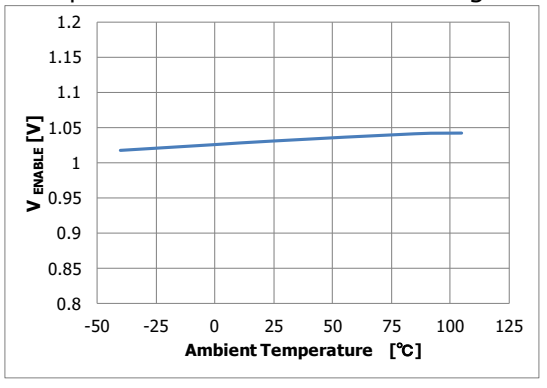

Dimensions

Package : SOP-10A
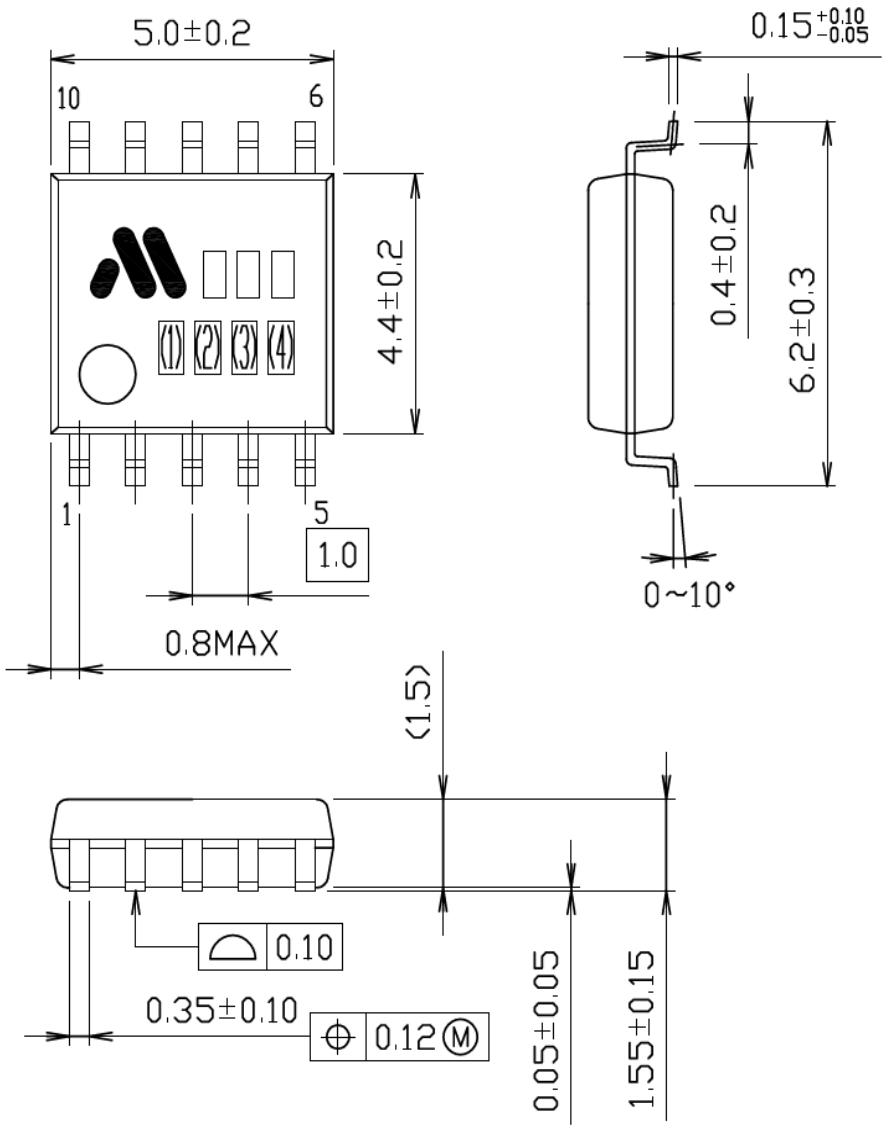
UNIT	mm