TORQUE TRANSDUCER TYPE TMNR-2KNM～5KNM

SPECIFICATIONS

Rated capacity(R.C.)	: 2 kN・m, 3 kN・m , 5 kN・m
Safe overload	: 120 %R.C.
Max. Safe overload	: 200 %R.C.
Rated output(R.O.)	: 1.6 mV/V±0.32 mV/V (in case of combine CSA-561)
Accuracy (Include Non-linearity, Hysteresis and Repeatability)	: 0.5 %R.O. (in case of combine CSA-561)
Recommended excitation	: 2 V AC
Insulation resistance (Bridge-body)	: 500 MΩ or more
Surrounding temrerature range	: 0 ℃ to 40 ℃ (because heat generation of Bearings.)
Safe temrerature range	: 0 ℃ to 90 ℃
Temperature effect on zero balance	: 0.2 %R.O./10℃
Temperature effect on output	: 0.2 %LOAD/10℃
Max. revolution	: 5000 r.p.m.
Rotation effect on zero balance	: 0.3 %R.O.
Generation of heat caused by rotation	: 50 ℃ or under/Max.revolution
IP class	: IP40
Rotation finder gear (build in)	: S45C,120tooth 1module,tooth width 10mm
Rotor weight	: approx. 13.2 kg(2KNM) approx. 13.3 kg(3KNM) approx. 13.4 kg(5KNM)
Total weight	: approx. 21 kg

ATTACHMENT

Cable : φ10 4core shield 5m

A Connector:1108-12A10-7M10.0
PRC03-12A10-7M10.5

Key : S45C,2pcs

OPTION

Base(NRBS-3)
Rotation detector(MP-981)
Rotation detector cable

Model(Capacity indicated)	2KNM	3KNM	5KNM
Rotor inertia (kg・cm2)	123.6	124.5	124.5
Rotor GD2 (kg・cm2)	494.3	498.2	498.2
Torsional stiffness (kN・m/rad)	319.5	384.5	446.9
Torsion peculiar pitch (kHz)	2.7	3.0	3.2
Twist angle at R.C. (°)	0.352	0.438	0.629
Safe radial load (N)	245.2	294.2	441.3
Safe radial load(Static) (N)	1470	1961	2942
Safe thrust load (N)	490.3	490.3	490.3
Bearing	6014ZZ	6014ZZ	6014ZZ

【NOTES】
Safe radial load:
Above data is at maximun speed.
Safe radial load(static):
Abobe data is direct loading by static test.

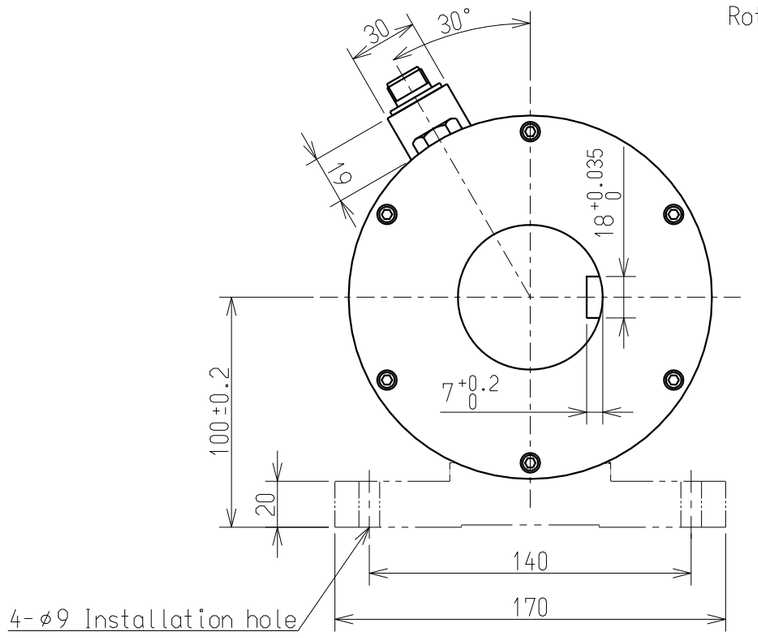

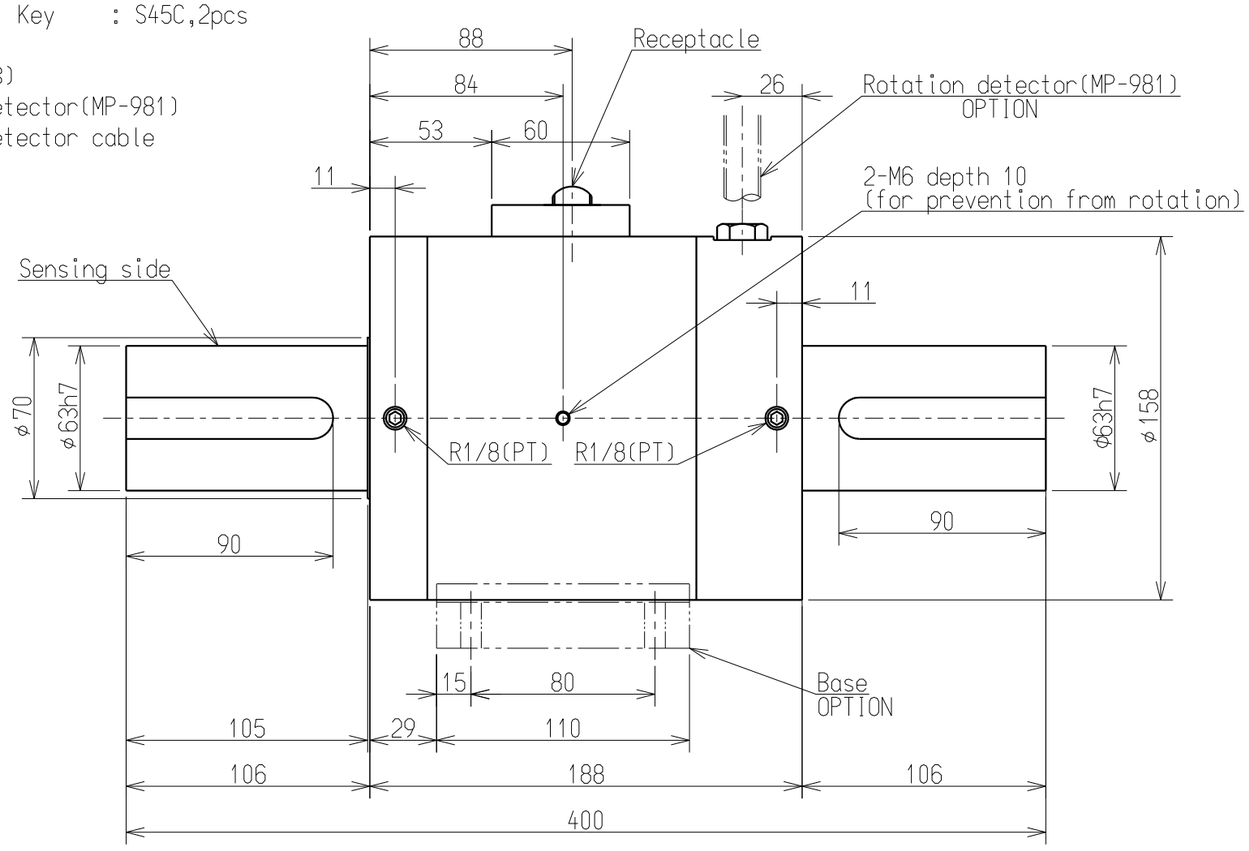

【KEY】

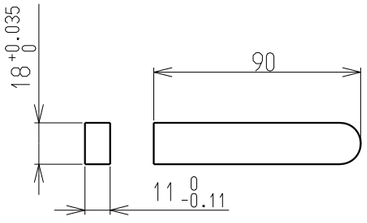

符号 MARK	日付 DATE	変更事項 REASON	ECN NO.	担当 ENGINEER	承認 APPROVED
A	2023.01.30	FN23-0011			
-	2015.02.10	NEW			

ミネベアミツミ株式会社
MinebeaMitsumi Inc.
センシングデバイス事業部
Sensing Device Business Unit

APPROVED	CHECKED	DRAWN

単位 UNIT mm
尺度 SCALE Free

一般公差 TOL	DIMENSION L	TOL
	<L≦6	±0.1
	6<L≦30	±0.2
	30<L≦120	±0.3
	120<L≦400	±0.5
	400<L≦1000	±0.8
	角度 DEG	±0.5

材質 MATERIAL: -
表面粗さ SURF.ROUGH.: -
熱処理 HEAT TREAT.: -
表面処理 FINISH: -

作成日 DATE 2023/01/30
品名 DESCRIPTION: OUTLINE
型式 MODEL NAME: TMNR-2KNM～5KNM
葉番 SHEET: 1／1
図番 DRAWING NO.: KT53908-2
改訂 REV.: A

A3-1-2017